*** FOR QUALITY CONTROL PURPOSES ONLY *** NOT TO BE DISTRIBUTED EXTERNALLY

# QC REQUIREMENT - BOWING CHECK

**15901**

PUT TOGETHER 2 x 4FT LONG PIECES
MEASURE GAP AT CENTRE OR END AS INDICATED

## TEST 1

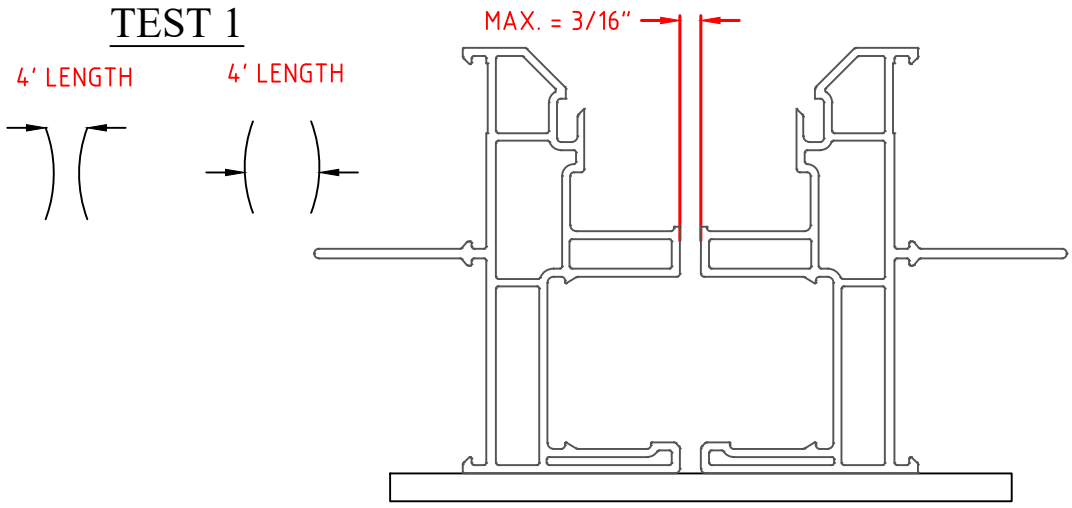


MEASURE GAP AT CENTRE OR END OF PROFILES

## TEST 2

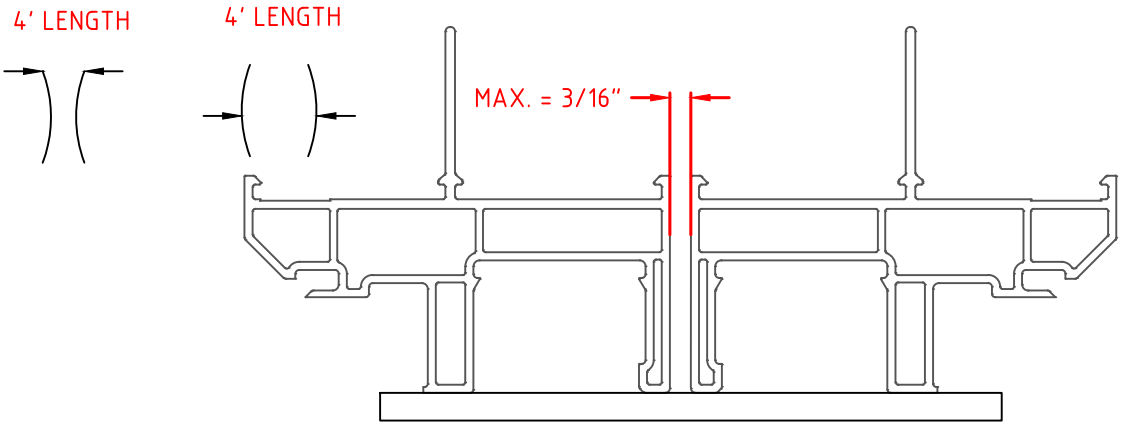


MEASURE GAP AT CENTRE OR END OF PROFILES

APPROVED BY: CPhubbes

DATE: 02.27.27

**QUALITY CONTROL PRINT**

VISION PROFILE EXTRUSIONS

This document and the information contained is owned by and proprietary to Vision Profile Extrusions Ltd. By receipt hereof, the holder agrees not to use the information, disclose it to any third parties nor reproduce this document without the prior written consent of Vision Profile Extrusions Ltd, and agrees to return this document forthwith upon request.

| | | | | | |
|---|---|---|---|---|---|
| PART: SH / SS WINDOW FRAME | | | | AREA: ##### in² | TOOL NO.: 15901 |
| EXTRUDER SIZE (mm): | HEAD ADAPTOR: 1 | SHEET: pf | SCALE: 1 : 1 | LBS/FT: ##### | DATE: FEB-24-2026 |
| TESTING OUTPUT (in/min): # - ## | MODULAR: | REV: A1 | DRAWN BY: DM | Lbs/M': ##### | DWG NO.: 15901C |